NITRIDE
SEMICONDUCTORS
Co.,Ltd.

UV LED SMD type SPECIFICATION

Model: NS385L-2SVR

Nitride Semiconductors Co., Ltd.

NITRIDE SEMICONDUCTORS Co.,Ltd.

1. Name: UV LED SMD type

2. Model: NS385L-2SVR

3. Optical and electrical characteristics (T_a=25 ºC, RH=30%)

Item	Symbol	Condition	Min.	Typ.	Max.	Unit
Forward Voltage*1	V_F	I_F=500mA	-	3.6	-	V
Peak Wavelength*2	λ_p	I_F=500mA	380	-	390	nm
Full width at half maximum	$\Delta\lambda$	I_F=500mA	-	12	-	nm
View Angle	$2\theta_{1/2}$	I_F=500mA	-	110	-	deg.
Optical Output Power*3	P_O	I_F=500mA	-	1000	-	mW
Thermal Resistance	$R_{\theta J\text{-}S}$*4	-		9.8		ºC /W

*1 Forward Voltage Measurement error : ±3%
*2 Peak Wavelength Measurement error : ±3nm
*3 Optical Output Power (Total Radiant Flux) measurement error : 10%
It is measured with an integrated sphere.
*4 $R_{\theta J\text{-}S}$ is thermal resistance between chip junction to PCB board bottom.
The PCB is made of aluminium and the size of PCB is 25mm x 25mm.

4. Absolute maximum ratings

Item	Symbol	Maximum rating	Unit
DC Forward Current	I_F	700	mA
Junction Temperature	T_j	90	ºC
Operating Temperature	T_{OPR}	-10 to +85	ºC
Storage Temperature	T_{STG}	-40 to +100	ºC

5. Dimensional outline, circuit diagram and materials (This product complies with RoHS.)
To be hereinafter described.

6. Standard optical and electrical characteristics
To be hereinafter described.

7. Reliability

(1) Test items and the results

Test item	Test condition	Test time	Test result
			Damages
Resistance to Soldering	T =260±5 ºC, 10±1 sec	1 time	0 / 10
Room Temp. Operational Life	T_a=25 ºC, I_F=500mA	1000 hrs	0 / 5

(2) Failure Criteria

Parameter	Symbol	Test Conditions	Allowable shift value	
			Min.	Max.
Forward Voltage	V_F	I_F=500mA	-	(U)×1.2
Optical Output Power	P_O	I_F=500mA	(L)×0.7	-

*(U): Upper standard level, (L): Lower standard level

Notes :

1. The value is measured after the test sample is cooled down to the room temperature.

8. Cautions

(1) The LEDs emit very strong UV radiation. Do not look directly at the LEDs. UV radiation can harm your eyes. To prevent inadequate exposure of UV radiation, wear UV protective glasses.
(2) The LEDs are very sensitive to static and surge. Take a full protection against static and surge.
(3) The powered LEDs generate heat. Heat dissipation should be considered in the application design to avoid the environmental conditions for operation in excess of the absolute maximum ratings.
(4) The LEDs should be kept at 5 ºC ~ 30 ºC and 50%RH or less in a dry box with a desiccant. If the LEDs are stored for 3 months or more after being shipped from seller, a sealed container with a nitrogen atmosphere should be used for storage. Replace the remained LEDs into the moisture-proof bag and reseal the bag after work to avoid those LEDs being exposed to moisture. Prolonged exposure to moisture can adversely affect the proper functioning of the LEDs. The conditions of resealing are 5 ºC ~ 40 ºC and 30%RH or less. If the package has been opened more than 4 weeks (MSL_2a) or the color of the desiccant changes, the LEDs should be dried for 10-12hr at 60±5 ºC.
(5) The LEDs can be soldered in place using the reflow soldering method. Seller cannot make a guarantee on the LEDs after they have been assembled using the dip soldering method. Reflow soldering should not be done more than one time. Soldering should be done as soon as possible after opening the moisture-proof bag.
Please refer to the followings about the recommended soldering conditions.

■Temperature profile

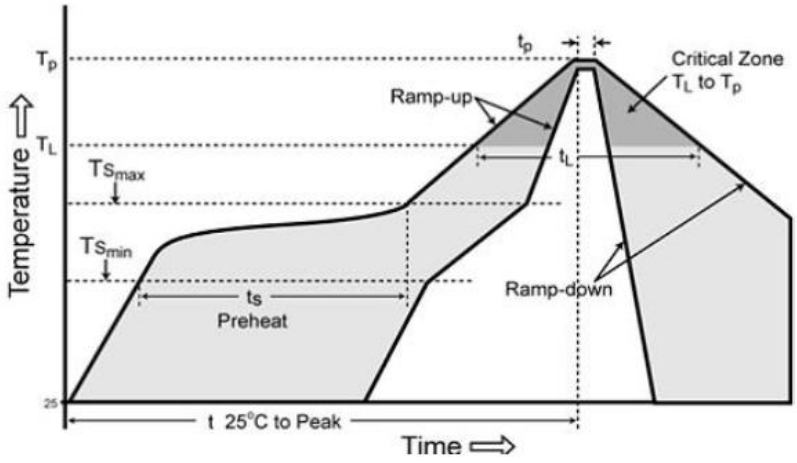

Profile Feature	Pb-Free Assembly
Average ramp-up rate (TL to TP)	3°C/second max.
Preheat	
Temperature Min (Tsmin)	150°C
Temperature Max (Tsmax)	200°C
Time (min to max) (ts)	60-180 seconds
Time maintained above:	
Temperature (TL)	217°C
Time (tL)	60-150 seconds
Peak/Classification Temperature (Tp)	240°C
Time within 5°C of actual Peak Temperature (tp)	20-40 seconds
Ramp-down Rate	6°C/second max.
Time 25°C to Peak Temperature	8 minutes max.

■Recommended soldering pad design

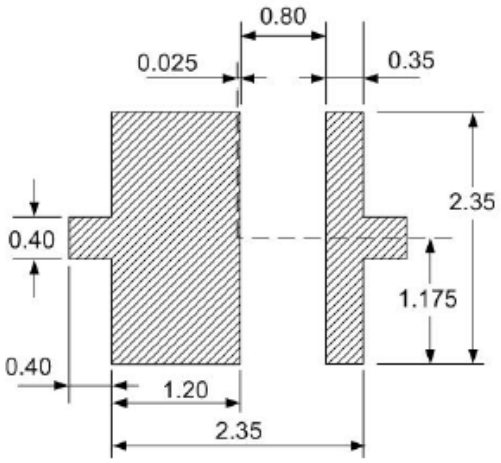

(Unit : mm)

(6) When soldering, do not put stress on the LEDs during heating. Do not apply mechanical force or excess vibration during the cooling process to normal temperature after soldering. Repairing should not be done after the LEDs have been soldered.
(7) Do not rapidly cool device after soldering.
(8) The optical window part of LEDs needs to be handled carefully. Do not touch the optical window especially with sharp tools such as tweezers. Optical window will attract dust so use covered containers for storage. It is not recommend to cover the optical window of the LEDs with other resin (epoxy, urethane, etc)
(9) When populating boards in SMT production, the picking up nozzle that does not affect the silicone resin should be used.
(10) The LEDs are not allowed to be used in any type of fluid such as organic solvent. If organic solvent adheres to the surface, it may affect the reliability of the LEDs. And do not use ultrasonic cleaning too.
(11) Do not handle the LEDs with acid or sulfur material in sealed space.
(12) Do not reverse engineering by disassembling or analysis of the LEDs without our consent. When defective LEDs are found, please contact our sales division.

9. Warranty

(1) The warranty is valid for UV LED device only.
(2) Perform an acceptance inspection on arrival of the goods. Return the defectives if any stipulating the disqualification and quantity.
(3) Embedding the LEDs into the application and the verification of life and other qualities in practical use shall be executed by user.
(4) The LEDs are intended to be used for ordinary electronics equipment. Do not use the LEDs for the applications that require the higher reliability and security and that may endanger life and health by the breakdown and the malfunction. Seller shall not bear any responsibility or liability with respect to any claims and damages caused by user's usage of the LEDs without following our intended purpose or any written consent.
(5) Seller shall not bear responsibility for any damages or defects caused by improper operation at the current in excess of the absolute maximum ratings that are not covered by warranty.

10. Miscellaneous

(1) The driving circuit must be designed to allow forward voltage only when it is ON or OFF. If the reverse voltage is applied to LED, migration can be generated resulting in LED damage.
(2) The maximum drive current should be determined for the package temperature.
(3) The technical information in this specification is not to guarantee the intellectual property rights of seller's nor a third party and not to grant the license.
(4) The appearance and specifications are subject to change for improvement without prior notice.

■Dimensional outline drawing

(Unit ： mm)

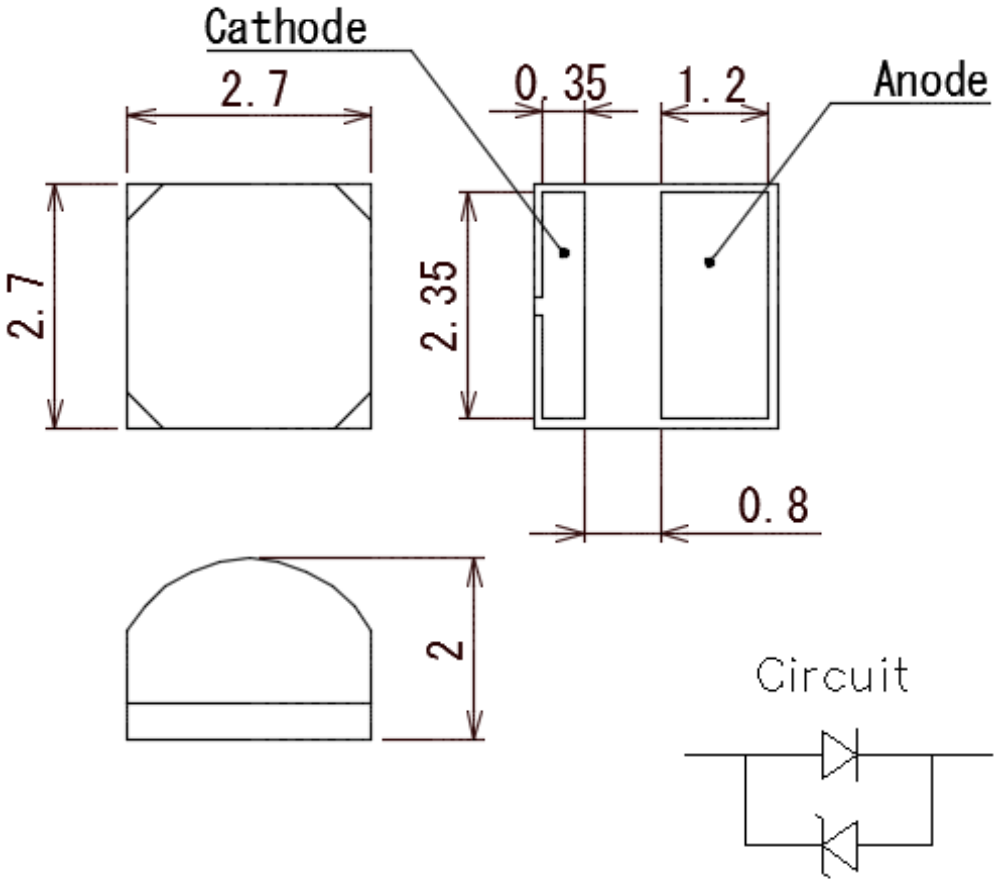

*A zener diode is built in the protective circuit against static electricity.

NITRIDE
SEMICONDUCTORS
Co.,Ltd.

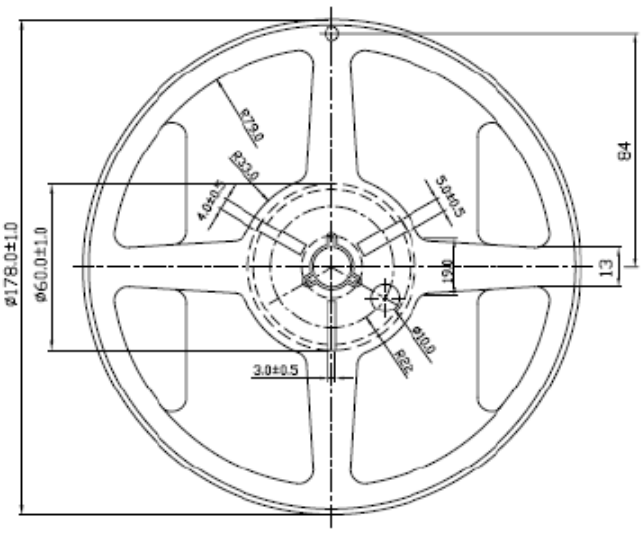

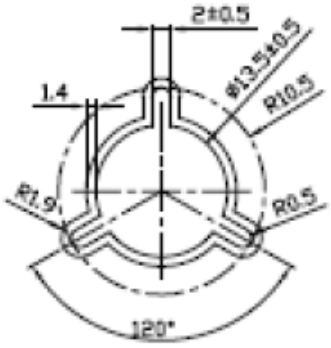

12-059-1

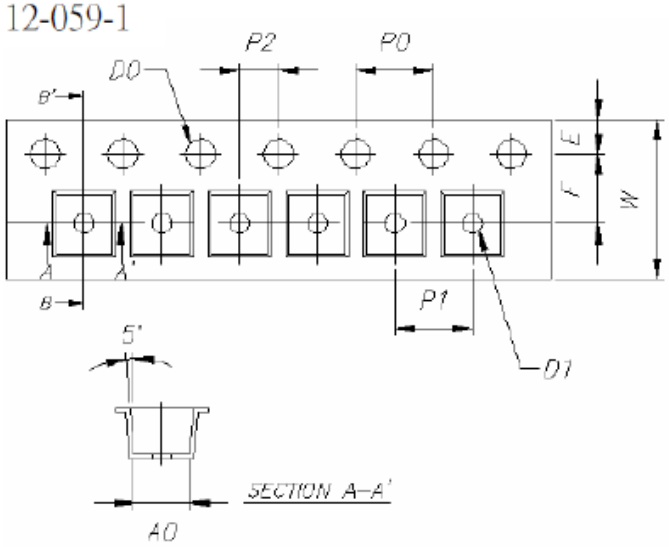

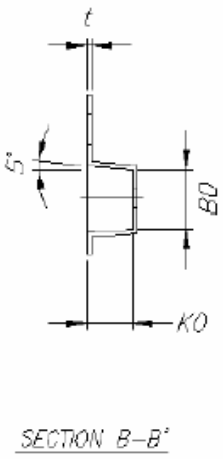

Symbo	Dimension
W	8.00 +0.20
E	1.75 +0.10
F	3.50 +0.05
D0	1.50+0.10 or 1.50-0.00
D1	1.00 +/- 0.10
Po	4.00 +/- 0.05
10Po	40.00 +/- 0.20
P1	4.00 +/- 0.10
P2	2.00 +/- 0.05
Ao	2.90 +/- 0.10
Bo	2.90 +/- 0.10
Ko	2.50 +/- 0.10
t	0.25 +/- 0.05

(Unit : mm)

■Optical and electrical characteristics

■Spectrum

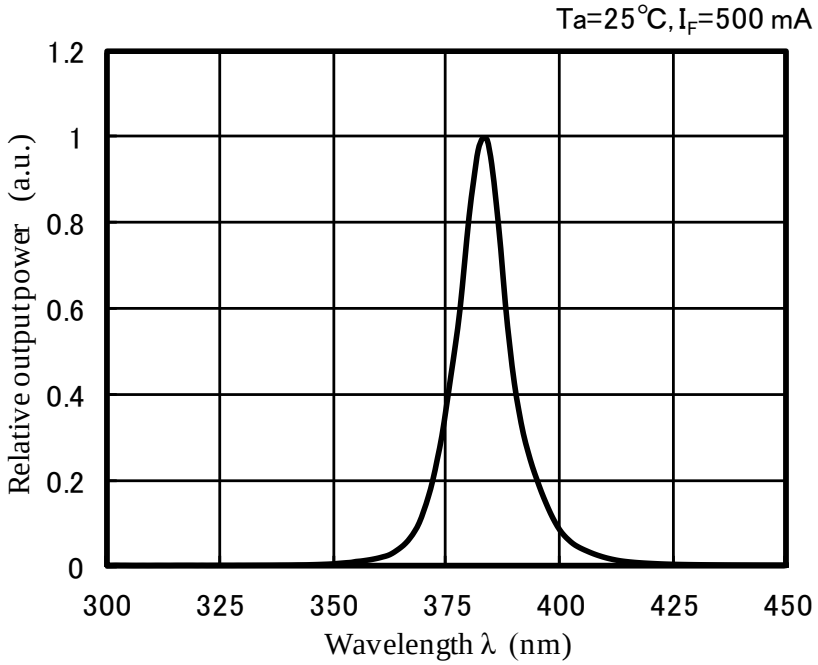

■Forward Current－Relative output power

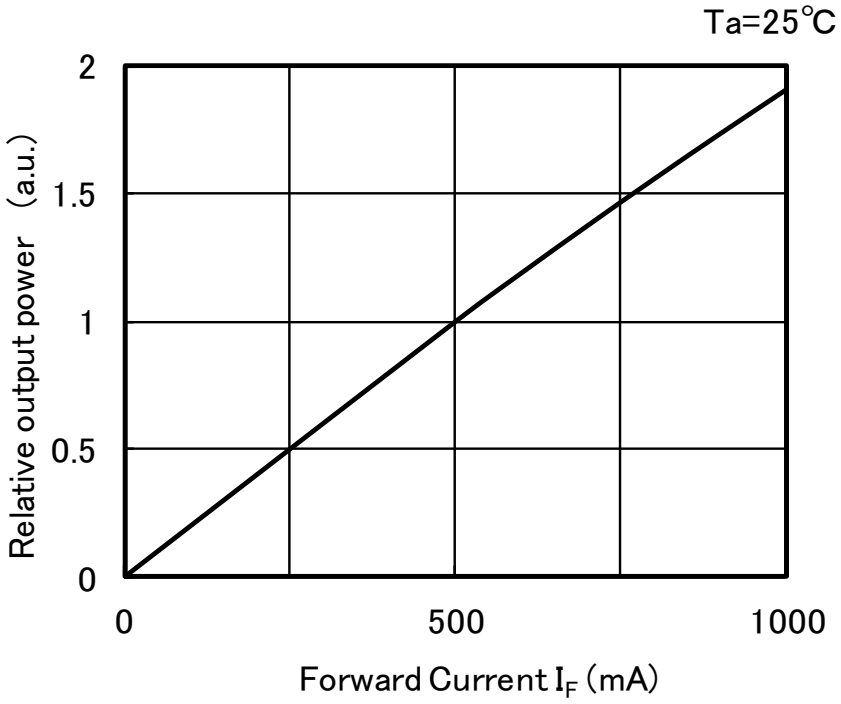

■Forward Voltage－Forward Current

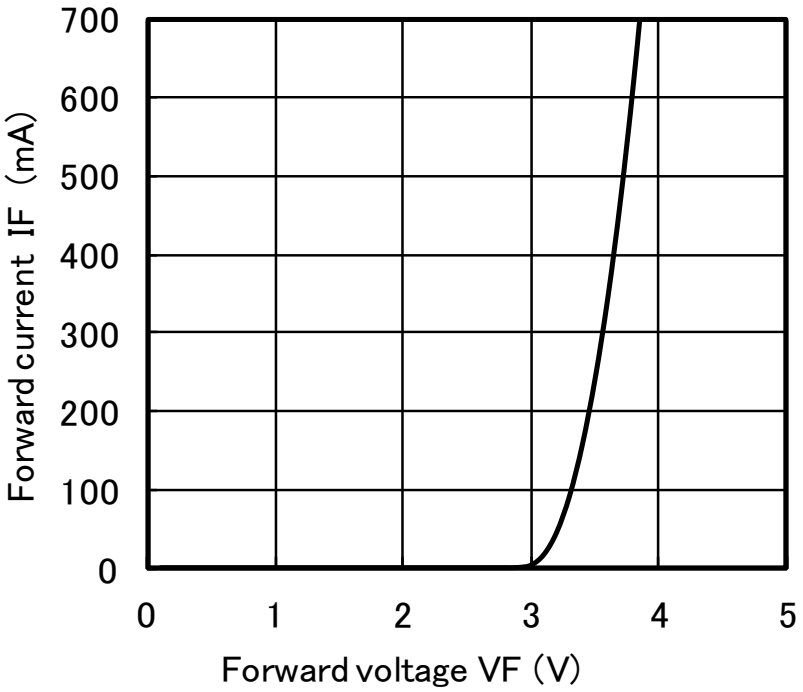

■Ambient Temperature－Relative output power

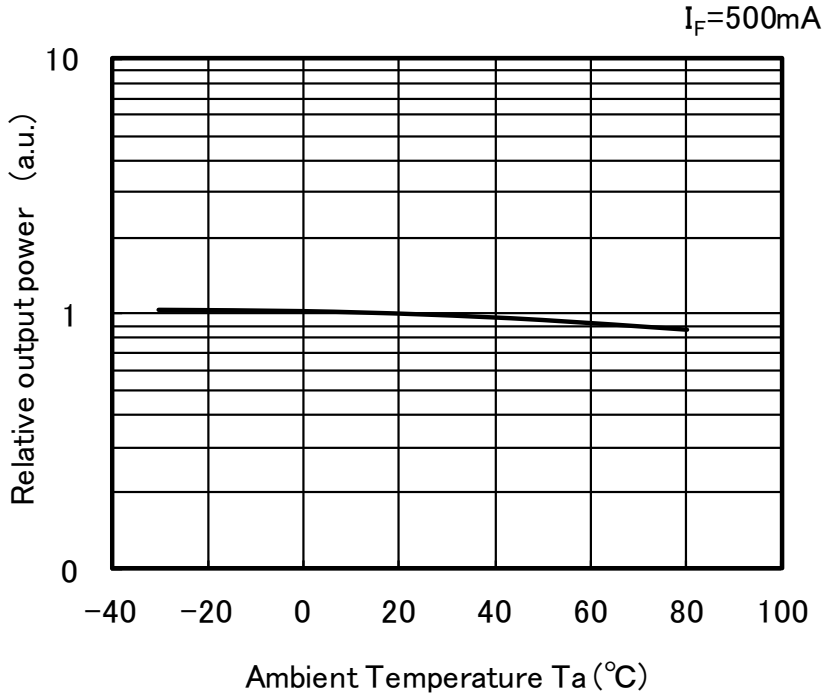

■Ambient Temperature－Forward Voltage

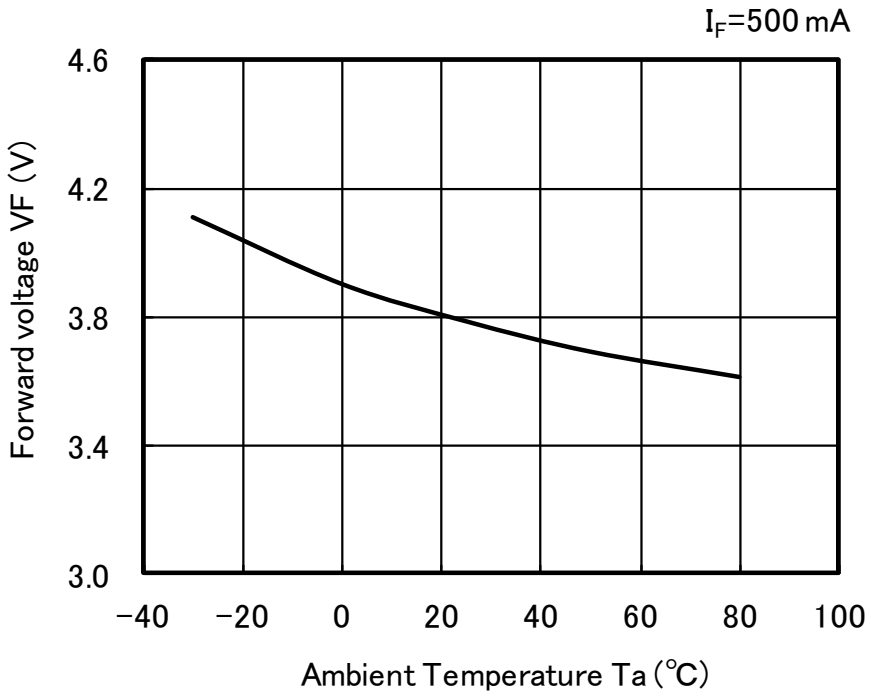
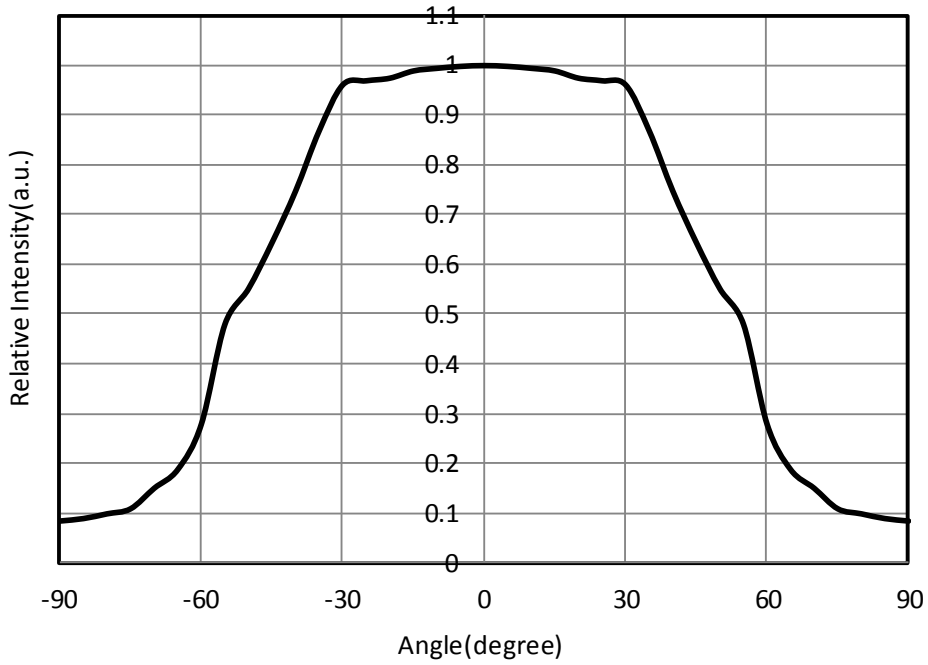
■Radiation pattern